ThruPut Manager® AE with PCS Product Overview

From www.mvssol.com

Intro

ThruPut Manager AE with PCS (Automation Edition with Production Control Services) extends the scheduling goals of CA 7 Workload Automation to the z/OS execution arena. Unlike standard z/OS, it takes into account the dependencies specified in the CA 7 scheduling database, the critical paths that may change over a production run and the importance of each application compared to any other work running. With **ThruPut Manager AE with PCS**, z/OS production execution is managed according to the CA 7 schedule and due-out times. Your schedule completes on time and your Production Control staff are freed for more useful tasks.

Context and Scope

ThruPut Manager AE with PCS runs in a z/OS JES2 environment and its production services are designed to work with CA 7 Workload Automation. However, **TM AE PCS** understands the total workload of the system, including ad hoc jobs that are outside the control of CA 7 and the resources they are using. **TM AE PCS** expects the datacenter to have overriding goals and constraints that need to be taken into account. Because **TM AE PCS** sees the complete picture, it is able to manage production jobs to best meet your scheduling deadlines.

ThruPut Manager AE with PCS automates and optimizes the z/OS system management of production batch. **TM AE PCS** is not a scheduler, but is designed to work with one. Nor is **TM AE PCS** an application code, job-stream or scheduling optimizer. Good tools are available for such purposes. Rather, **TM AE PCS** uses its knowledge of the workload as scheduled, the resources available and the business priorities to process your workload through z/OS and JES2 in the best manner possible.

With **TM AE PCS**, CA 7 functions as usual. **TM AE PCS** does not modify CA 7 processing in any manner; rather, its "domain" is that of z/OS batch execution. However, as each job is scheduled by CA 7, **TM AE PCS** automatically detects the resources it needs, including datasets and tapes. This can alleviate the tedious work of maintaining negative dependencies and keeping VRM information up-to-date in the CA 7 database.

Simplicity

Staff are freed up for more valuable tasks

Until now, the technical support and operational load has only increased with the complexity of the batch processing system. With **ThruPut Manager AE with PCS**, operations, production control, and technical support are relieved of tedious and error prone tasks, knowing the system will automatically handle many situations they previously needed to attend to manually and alert them to any events they need to take action on. Your production control staff are freed up for more valuable tasks such as problem solving activities like dealing with rerun/restart events and strategic initiatives to improve the production control environment.

Simplify CA 7 Database Maintenance

ThruPut Manager AE with PCS automatically determines, with each run of a job, the characteristics of the job and all its dataset, tape drive and software needs. With this information and its built-in automation, **TM AE PCS** eliminates the need to:

- Define negative dependencies for the purposes of preventing dataset conflicts.
- Define resource counts for VRM.

For further information, contact:

MVS Solutions Inc.
8300 Woodbine Avenue
4th Floor
Markham, ON Canada
L3R 9Y7

Ph: (905) 940-9404
Fx: (905) 940-5308

marketing@mvssol.com
http://www.mvssol.com

ThruPut Manager is a registered trademark of MVS Solutions Inc.

J06

©2010 MVS Solutions Inc. All rights reserved.

- Define job priorities on a job-by-job basis.
- Define deadline or due-out times for jobs other than headers, trailers and milestone jobs.

Service

Completing Your Schedule on Time

With **ThruPut Manager AE with PCS**, the z/OS execution environment understands CA 7 dependencies, priorities and due-out times. Production Control gets the results they need with minimal intervention in the job execution process.

TM AE PCS continuously assesses the critical path and monitors its performance. JES2 job selection and many other processes are automatically influenced to give priority to critical path work and to act in accordance with CA 7 priorities. The production schedule is met, and in an optimal manner.

Handling the Difficult Periods

The intelligence of the **ThruPut Manager AE with PCS** solution is evident in that it recognizes that escalation follows a common pattern based on complex and fluctuating variables. To intervene manually is a fluid and complex task. **TM AE PCS** has internalized these complexities in its battle plan and meticulously keeps track of the state of the workload. It is in the perfect position to ensure that the appropriate workload gets priority. In unusual circumstances such as when a processor has been down and it is not possible to meet all the deadlines, **TM AE PCS** makes the best tradeoffs to ensure only the lowest priority work will be impacted.

TM AE PCS manages through these tight situations according to policies that are established in advance. It can assess and react to the situation faster than an operator, as well as execute more complex responses in a timely manner. This leads to fewer “on the fly” decisions and fewer human errors.

Easing of Batch Window Constraints

Production batch can be processed in a shorter elapsed time with **ThruPut Manager AE with PCS** staging volumes and recalls before job submission, managing job selection, eliminating execution delays, controlling resources, optimizing system load and eliminating interference. These system-oriented improvements and internal efficiencies reduce overall execution time and ease batch window constraints.

Savings

Besides the ability to process increased workloads in the same batch window and therefore defer a CPU upgrade, **ThruPut Manager AE with PCS** provides other opportunities to save money and reduce costs:

- With improved workload distribution tools, you may be able to reduce your software licenses, while complying with vendor conditions and keeping your software maintenance procedures straightforward.
- Tape utilization is improved with **TM AE PCS** and may allow you to defer upgrades in this area.
- Since **TM AE PCS** can prioritize your workload, you may be able to reduce your defined capacity to reduce your CPU charges, and all the associated software charges.

©2010 MVS Solutions Inc. All rights reserved.

- Staff costs are contained. With virtually no exits and workarounds to maintain, the system programmer load is reduced. With less manual intervention, operator load is reduced. With less scheduler database maintenance, production control effort is reduced, and, with less complexity and greater transparency, the management task is simplified.

Critical Path Management

This is the heart of **ThruPut Manager AE with PCS**. It monitors the jobs in the critical path, and uses various techniques and algorithms to favor these jobs. It also monitors the other application jobs and the slack time in the schedule to determine if the critical path has actually shifted to another path. **TM AE PCS** then raises the priority of the jobs in the new critical path and begins to favor them. The overall objective is to complete all applications before their due-out time.

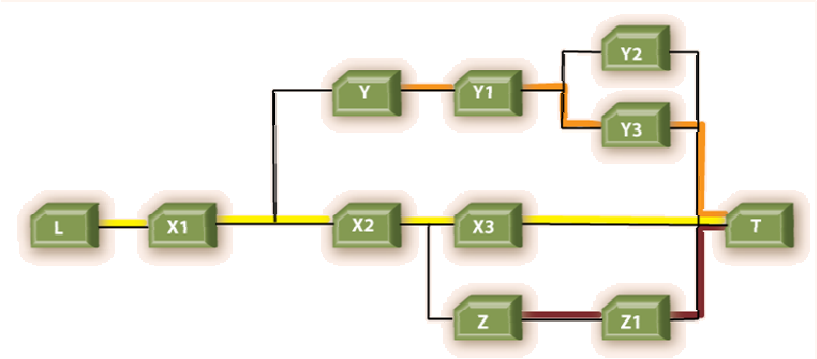

How the critical path changes during a production cycle

At the beginning of the production cycle the critical path for this application is shown by the yellow line; when job Y is delayed, the critical path shifts to the orange line and priority shifts to Y1 and Y3; When Z is sufficiently delayed, the critical path shifts again to the red path and Z1 is favoured over both X3 and Y3, resulting in T completing in the earliest time then possible.

Relationship to ThruPut Manager AE

ThruPut Manager AE with PCS includes all the functionality of **ThruPut Manager AE**, which in turn, includes all the functionality of **ThruPut Manager SE**. As appropriate, **TM AE PCS** marshals the facilities of **ThruPut Manager** components to deliver the production services described in this overview. **ThruPut Manager AE** provides the automation engine, keeping track of all the workloads (production and non-production), and acting on their relative importance and priorities. **TM AE PCS** interacts with **TM AE** to manage the production priorities based on CA 7 scheduling requirements, application importance and due-out times.

An upgrade path is provided from **TM SE** or **TM AE** to **TM AE PCS**.

©2010 MVS Solutions Inc. All rights reserved.